F 118102C-1
F 118102G-1

Single Handle Basin Mixer M
(Chrome / Golden)
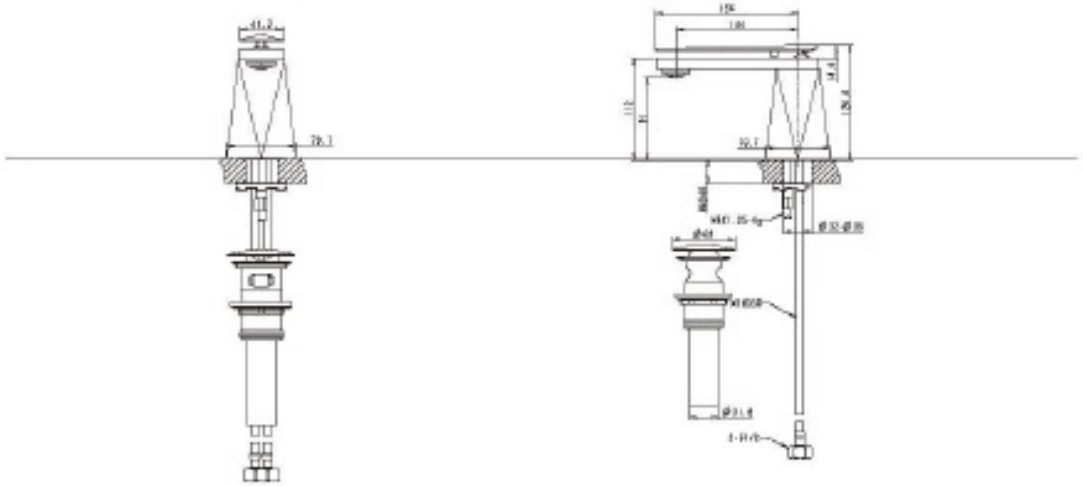
单把单孔面盆龙头M　铬/金